INSTRUCTION SHEET

HYDRAULIC ROTATION

APPLICATION: B84A, B94A, SBG1084 & SBG1094 3 POINT SNOWBLOWERS

INSTALLATION

1. **Figure 1:** Place the hole identified "POSITION" on the chute base as shown in figure.
2. **Figure 1:** Apply grease on the chute base and around the snowblower chute ring and install the chute with the four retaining plates (item 1), eight 1/2"NC x 1 1/4" bolts and eight serrated flange nuts (items 2-3). Do not tighten immediately.
3. **Figure 1:** Attach the rotation bracket (item 5) in the slot on the left side of the housing with a 1/2"NC x 1 1/4'' hex bolt and a 1/2" serrated flange nut (items 6-7).
4. **Figure 1:** Place the spacer ring (item 8) on the 13/16" hole of the housing; insert the pivot bushing (item 9) in the bell crank (item 10) and slide the bell crank between the flat bars of the rotation bracket (item 5).
5. **Figure 1:** Attach the other end of the rotation bracket and the bell crank in the 13/16" hole of the housing with the 3/4"NC x 5" hex bolt, a 3/4" lockwasher and a 3/4" hex nut (items 12-11-13) in the exact order shown. Tighten securely.
6. **Figure 1:** Grease generously both holes of the push arm (item 17) and install one end under the flat bar welded on the base of the chute and secure with a 1/2'' x 1" shoulder screw, two 9/16" hole flat washer, a 3/8" hole flat washer and a 3/8"NC stover nut (items 14-18-15-16) in the exact order shown. Tighten leaving some movement to the mechanism.
7. **Figure 1:** Install the other end of the push arm (item 17) under the bell crank (item 10) and secure with a 1/2'' x 1" shoulder screw, a 9/16" hole flat washer, a 3/8" hole flat washer and a 3/8"NC stover nut (items 19-18-20-21) in the exact order shown. Tighten leaving some movement to the mechanism.
8. **Figure 1:** Attach the fixed section of the cylinder (item 4) to the rotation bracket (item 5) and the sliding section to the bell crank (item 10) placing a Ø 1 1/16" flat washer (item 22) between the cylinder yoke and the top of the bell crank then secure with the cylinder pins and the circlips. Point the hydraulic ports upward as illustrated.

   NOTE: The 1 1/16" flat washer (item 22) is required only if the cylinder pin rubs against the snowblower housing.

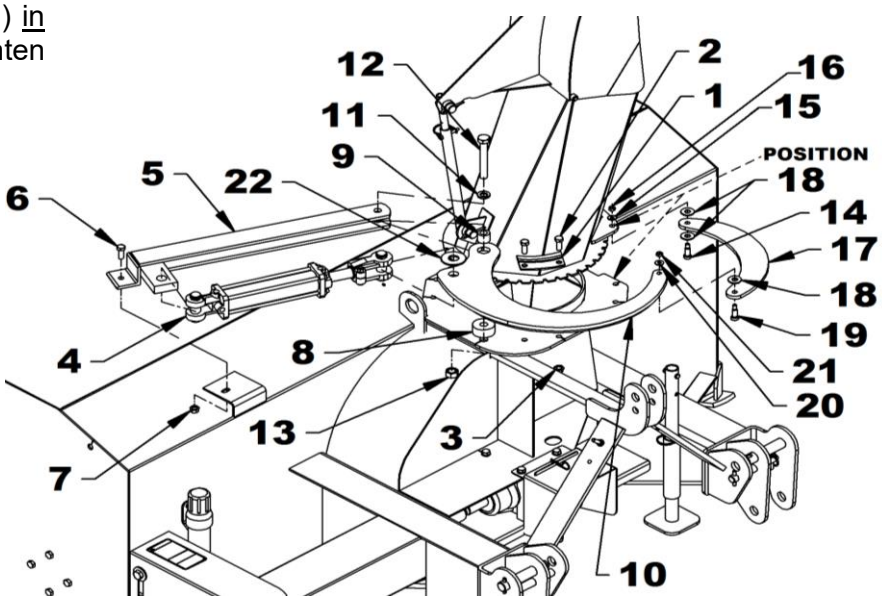

Figure 1

9. **Figure 2:** Connect the 3/8" ends of both hoses (item 2) to the cylinder (item 1) and install a quick coupler with rubber dust cap (items 6-7) at the end of each hose.

10. **Figure 2:** Secure the hoses on the three point hitch with the hose clamp, 3/8" NC x 1 1/2" lg bolt and 3/8" NC nylon insert nut (items 4-3-5) and attach hoses together with the nylon tie wraps (item 8) where needed.

<u>WARNING:</u> To avoid serious personal injury. Escaping hydraulic/ diesel fluid under pressure can penetrate the skin causing serious injury.

- **Do not use your hands to check for leaks. Use a piece of cardboard or paper to search for leaks.**

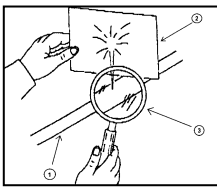

(1) Hydraulic hose
(2) Cardboard
(3) Magnifying glass

- **Stop engine and relieve pressure before connecting or disconnecting lines.**
- **Tighten all connections before starting engine or pressurizing lines.**

If any fluid is injected into the skin, obtain medical attention immediately or gangrene may result

Figure 2

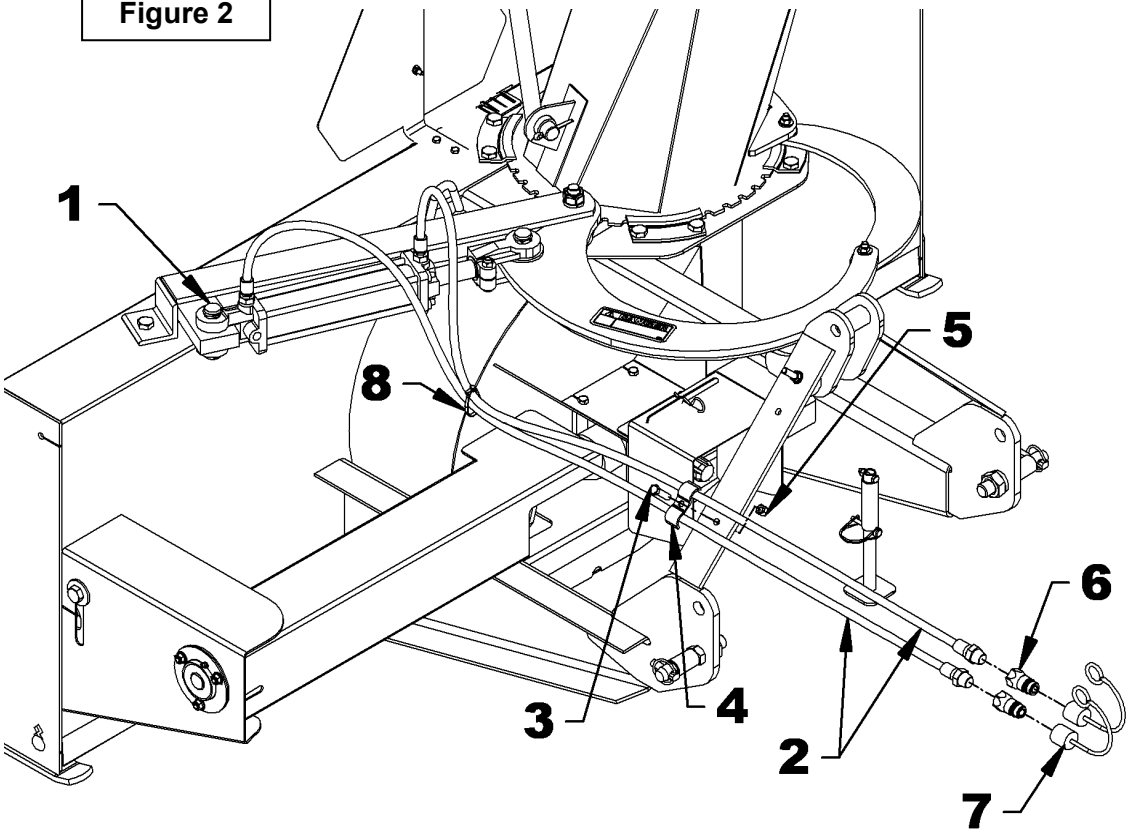
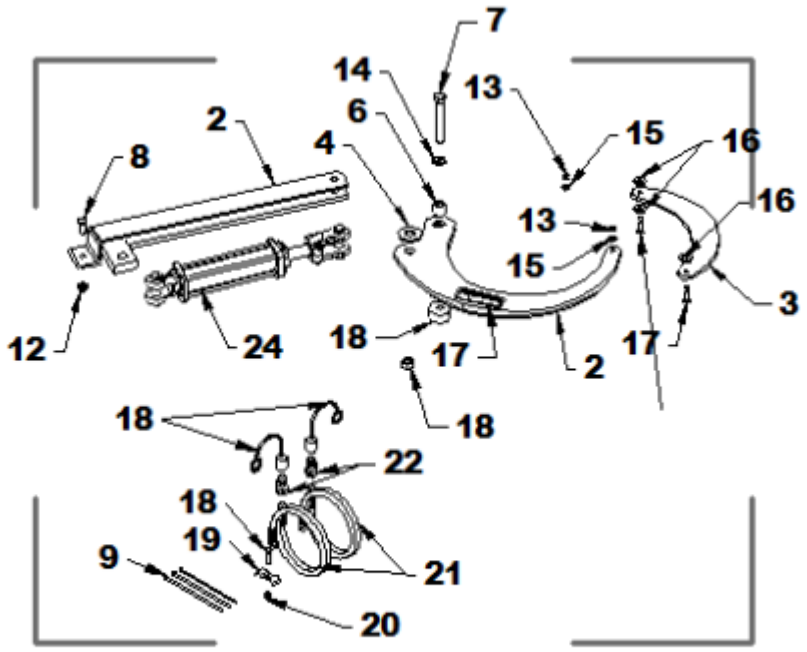
REF.	DESCRIPTION	QTY	PART #
1	Bell crank	1	664473
2	Cylinder bracket	1	664475
3	Sleeve for cylinder rotation	1	664476
4	Shim for cylinder rotation	1	664477
5	Hose 3/8 X 92", 3/8 NPT RM X 1/2 NPT RM	2	3700143
6	Cylinder 2" X 8"	1	3900022
7	Push arm	1	664474
8	Decal "DANGER" #336	1	664548
9	Shoulder bolt ø1/2" X 1" Lg. 3/8" NC	2	664578
10	Hex bolt 3/8"NC X 1 1/2" Gr.5 Plated	1	0100040
11	Hex Bolt. ø1/2"NC x 1 1/4" Gr.5 Plated	1	0100069
12	Hex nut. ø3/4"NC PQE	1	0900008
13	Serrated flange nut. ø1/2"NC Plated	1	0900046
14	Lock washer ø3/4" Plated	1	1200008
15	Hex bolt ø3/4"NC x 5" Gr.5 Plated	1	0100126
16	Flat washer ø1/2" (ø9/16" INT) Plated	3	1400006
17	Flat washer ø5/16" (ø3/8" int.) Plated	2	1400003
18	Stover lock nut ø3/8"NC Plated	2	1100003
19	Flat washer 1" (Ø1 1/16" INT.) Plated	1	1400013
20	Quick coupler ø1/2" NPT Male	2	656480
21	Dust cap	2	664898
22	Nylon tie wrap 8" x 4.8mm Black	3	2100003
23	Hose clamp	1	666583
24	Nylon insert locknut ø3/8"NC Plated	1	1000006